THIS COPY IS PROVIDED ON A RESTRICTED BASIS AND IS NOT TO BE USED IN ANY WAY DETRIMENTAL TO THE INTERESTS OF PANDUIT CORP.

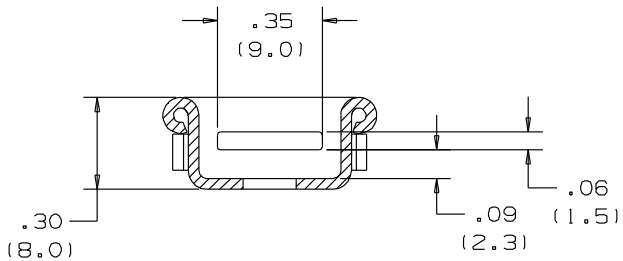

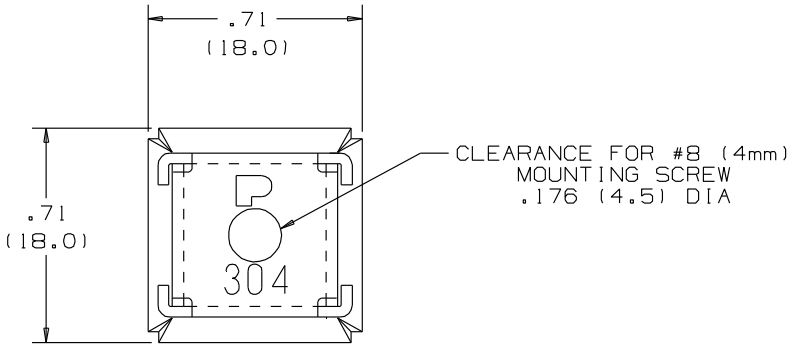

NOTES:

1. DIMENSIONAL TOLERANCES:
   .XX ±.02 (.5)
   .XXX ±.01 (.25)
2. USE WITH STD,LH & HVY CROSS SECTION MLT's.
3. DIMs IN () ARE mm.
4. MAXIMUM SCREW HEAD HEIGHT .09 (2.3).
5. STAINLESS STEE SCREWS ARE RECOMMENDED TO AVOID CORROSION PROBLEMS ASSOCIATED WITH DISSIMILAR METALS.
6. PACKAGE QTY: Q = 25

S41074_02

REV	DATE	BY	CHK	DESCRIPTION	ECN #	PM	CUST
02	8/04	JAMB	JJB	NOTE 2:ADDED THE "LH"(LIGHT-HEAVY)MLT PRODUCT FOR USE WITH MTM2H TIE MOUNT	11906	CCH	JJB
01	1/01	KMD	JAC	ADDED NOTE 6. CAD FILE SPEC WAS N41074SA_PCD_00	09010	CCH	JAC
00	11/92	BO	JAC	RELEASED	01265	GP	LCA

PANDUIT CORP. TINLEY PARK, ILLINOIS

2-WAY METAL TIE MOUNT
MTM2H

UNLESS OTHERWISE SPECIFIED, DIMENSIONAL TOLERANCES ARE:
(.X) ± (.XXX) ±
(.XX) ± ANGLES ±

UNLESS OTHERWISE SPECIFIED, ALL DIMENSIONS ARE GIVEN IN INCHES, THIRD ANGLE PROJECTION.

DRAWN BY: BJO
MAT'L: 304 STAINLESS STEEL
SCALE: 2X
DATE: 11/11/92
CHK'D: JAC
DRAWING NO.: S41074
DWG SIZE: A